QUALIFYING

WOMEN 15SF (0 competitors)

Super Final

WOMEN 1500 (25 competitors)

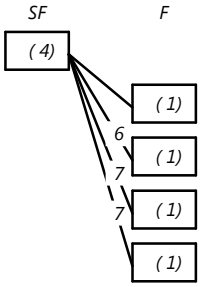

Semi Final
Final
Final
Final
Final

WOMEN 1000 (25 competitors)

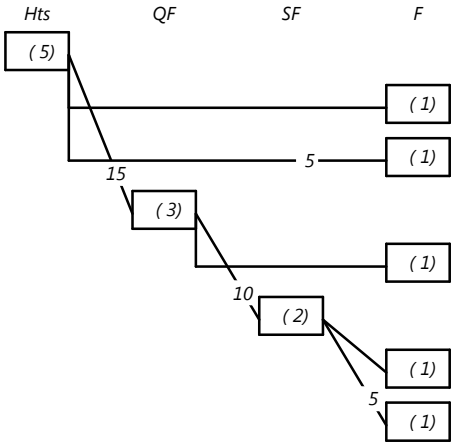

Heats
Final
Final
Quarter Finals
Final
Semi Final
Final
Final

WOMEN 500 (25 competitors)

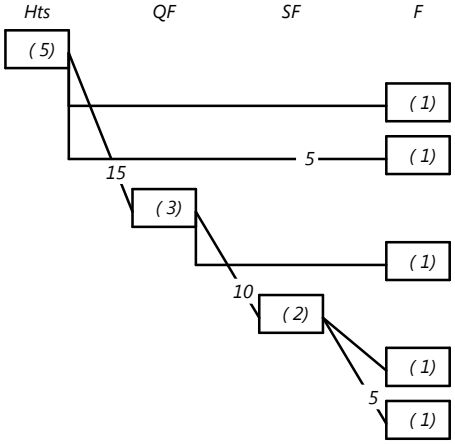

Heats
Final
Final
Quarter Finals
Final
Semi Final
Final
Final

MEN 15SF (0 competitors)

Super Final

QUALIFYING

MEN 1500 (29 competitors)

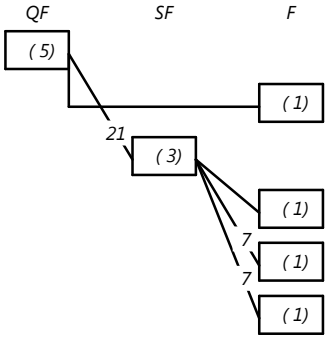

Quarter Finals
Final
Semi Final
Final
Final
Final

MEN 1000 (29 competitors)

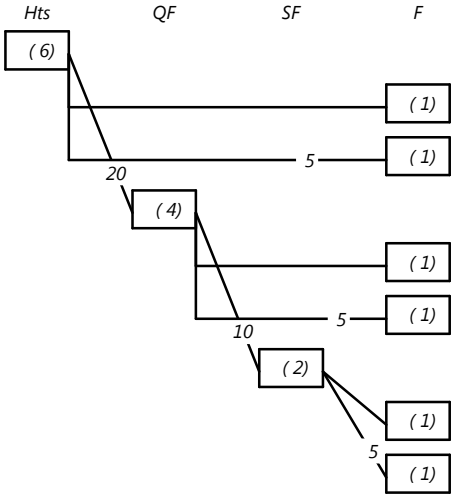

Heats
Final
Final
Quarter Finals
Final
Final
Semi Final
Final
Final

MEN 500 (29 competitors)

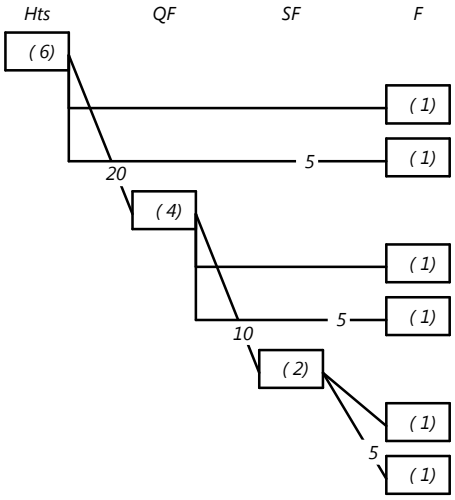

Heats
Final
Final
Quarter Finals
Final
Final
Semi Final
Final
Final

QUALIFYING

JUN C+D MEN 1500 (24 competitors)

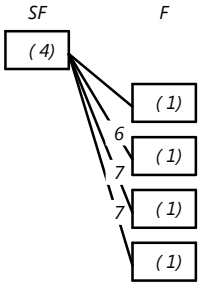

Semi Final
Final
Final
Final
Final

JUN C+D MEN 1000 (24 competitors)

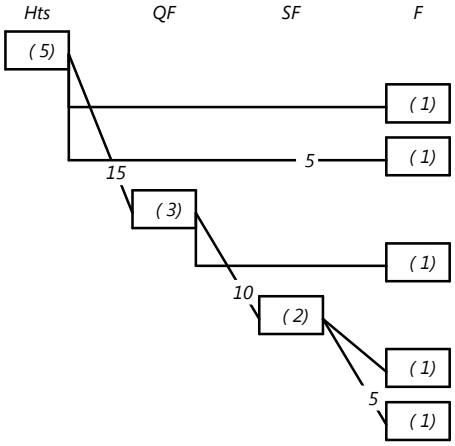

Heats
Final
Final
Quarter Finals
Final
Semi Final
Final
Final

JUN C+D MEN 500 (24 competitors)

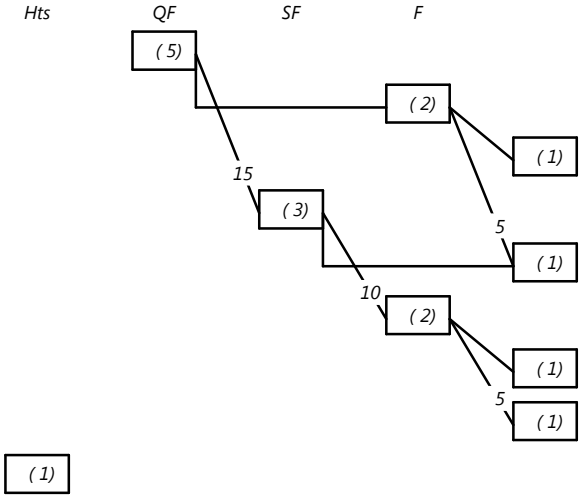

Heats
Semi Final
Final
Quarter Finals
Final
Semi Final
Final
Final
Final

QUALIFYING

JUN C+D WOMEN 1500 (31 competitors)

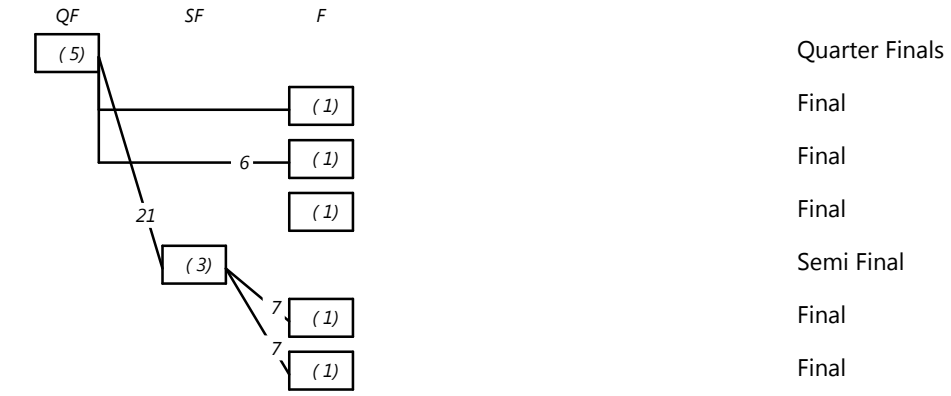

JUN C+D WOMEN 1000 (31 competitors)

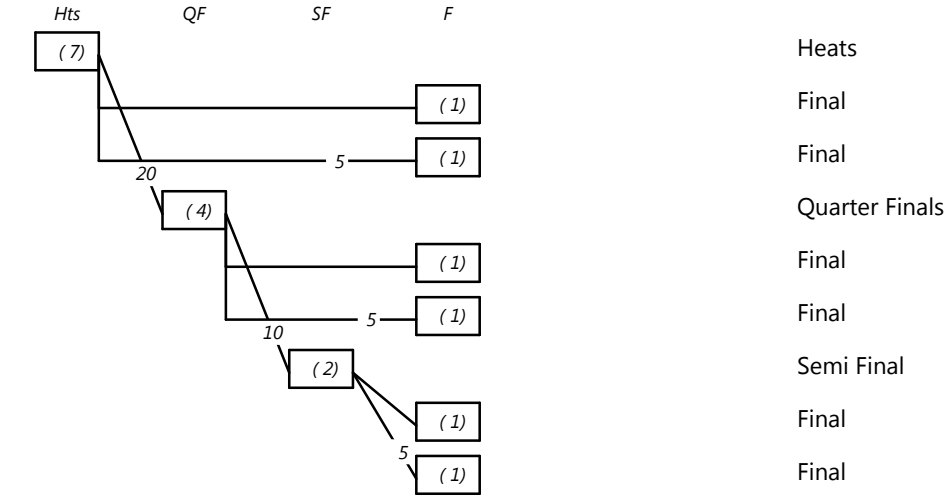

QUALIFYING

JUN C+D WOMEN 500 (31 competitors)

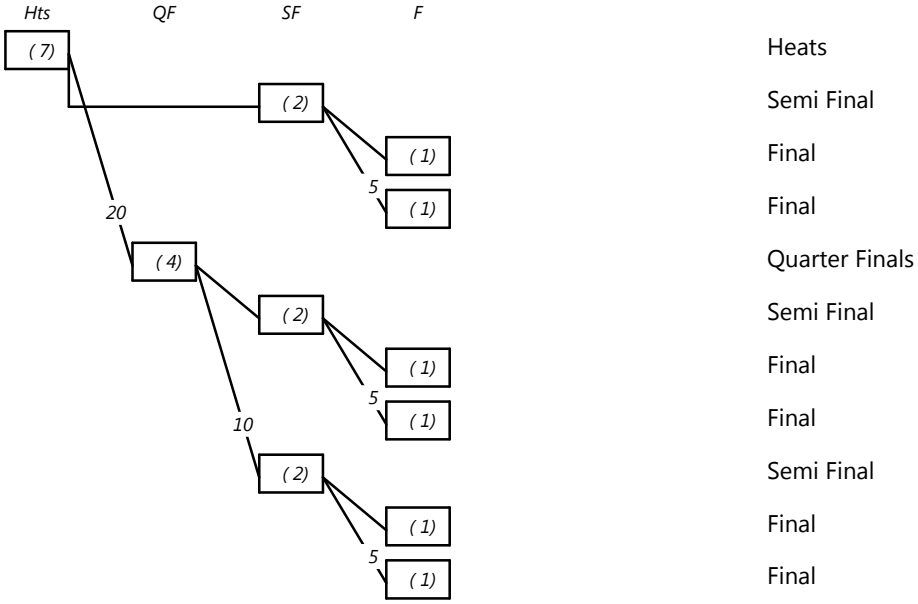

RELAY C+D WOMEN R2K (0 competitors)

RELAY C+D MEN R2K (0 competitors)

MIXED TEAM RELAY R2K (0 competitors)